R3 JULY 2018

STRUCTURAL DESIGN CRITERIA

BUILDING CODE — 2018 IBC

DESIGN DEAD LOAD — ACTUAL WEIGHT OF STRUCTURE

ROOF LIVE LOAD — 20 PSF

ROOF SNOW LOAD

1. GROUND SNOW LOAD — $P_g := 0$ PSF
2. SNOW EXPOSURE FACTOR — 1.0
3. SNOW LOAD IMPORTANCE FACTOR — 1.2
4. THERMAL FACTOR — 1.0
5. TOTAL FLAT ROOF SNOW ~~LOAD~~ — $P_f := 0$ PSF

WIND DESIGN DATA

1. BASIC WIND SPEED — 111 MPH Ultimate (3 SECOND GUST)
2. WIND IMPORTANCE FACTOR — N/A
3. OCCUPANCY CATEGORY — II
4. WIND EXPOSURE CATEGORY — C

EARTHQUAKE DESIGN DATA

1. SEISMIC IMPORTANCE FACTOR — $I = 1.0$
2. MAPPED SPECTRAL RESPONSE ACCELERATIONS — $S_S := 0.083$ $S_1 := 0.054$
3. SITE CLASS — D
4. SPECTRAL RESPONSE COEFFICIENTS — $S_{DS} := 0.089$ $S_{D1} := 0.086$
5. SEISMIC DESIGN CATEGORY — B
6. BASIC SEISMIC FORCE SYSTEM — STEEL ORDINARY CANTILEVERED COLUMN
7. DESIGN BASE SHEAR — $V = 1{,}600$ LBS
8. SEISMIC RESPONSE COEFFICIENT — $C_S := 0.071$
9. RESPONSE MODIFICATION FACTOR — $R := 1.25$
10. ANALYSIS PROCEDURE — EQUIVALENT LATERAL FORCE

FOUNDATION DESIGN DATA

1. ALLOWABLE BEARING PRESSURE — 2500 psf
2. LATERAL BEARING PRESSURE — 170 psf/ft
3. GEOTECHNICAL REPORT PREPARER — CONTOUR ENGINEERING
4. GEOTECHNICAL REPORT NUMBER — G22RAC08
5. GEOTECHNICAL REPORT DATE — JULY 28, 2022

MATERIAL SPECIFICATIONS

1. STRUCTURAL STEEL WIDE FLANGE — ASTM A992
2. STRUCTURAL STEEL PLATES — ASTM A36
3. CHANNELS LESS THAN 6" DEEP — ASTM A36
   ALL OTHER CHANNELS — ASTM A572, GR. 50
4. ANGLES LESS THAN L3x3x1/4 — ASTM A36
   ALL OTHER ANGLES — ASTM A572, GR. 50
5. HOLLOW STRUCTURAL SECTIONS — ASTM A500, GR. C
6. 3" METAL DECK — ASTM A653, GR. 50
7. WELDING ELECTRODE STRENGTH — E-70XX
8. ANCHOR BOLTS — ASTM F1554, GR. 36
9. STRUCTURAL BOLTS — ASTM A307 GR. B (U.N.O)
10. STRUCTURAL NUTS — ASTM A563A, HEAVY HEX (U.N.O)
11. STRUCTURAL WASHERS — ASTM F436 (U.N.O)
12. 28 DAY CONCRETE COMP. STRENGTH — fc = 4000 PSI (U.N.O.)
13. CONCRETE REINFORCING STEEL — ASTM A706, GR. 60 DEF. BARS

U.N.O. - UNLESS NOTED OTHERWISE (REFER TO DRAWINGS)

ABREVIATIONS

A.F.F.	ABOVE FINISH FLOOR	N.B.M	NOT BY MADISON
@	AT	N.S.	NEAR SIDE
⅊	BUILDING LINE	NEO	NEOPRENE
℄	CENTER LINE	O/C	ON CENTER
C/C	CENTER TO CENTER	O/O	OUT TO OUT
CLR	CLEAR	ℙ	PLATE
DIA.	DIAMETER	SQ.	SQUARE
EA.	EACH	T.O.I.	TOP OF ISLAND
ELEV.	ELEVATION	TYP.	TYPICAL
F.S.	FAR SIDE	UG	UNDERGROUND
FTG.	FOOTING	V	VENT
G.C.	GENERAL CONTRACTOR	W.A.	WHITE ACRYLIC
GA.	GAUGE		
GALV.	GALVANIZED		
HX.HD.	HEX HEAD SCREW		

GENERAL NOTES

1. STRUCTURAL WELDED JOINTS SHALL CONFORM TO THE PROVISIONS OF AWS D1.1-04, STRUCTURAL WELDING CODE-STEEL, PUBLISHED BY THE AMERICAN WELDING SOCIETY.
2. ANY FIELD WELDING SHALL REQUIRE SPECIAL INSPECTION. WELDER CERTIFICATION SHALL BE AVAILABLE AT THE JOBSITE DURING TIMES OF INSPECTION.
3. ALL STRUCTURAL BOLTED CONNECTIONS SHALL BE ASTM GRADE A-307 BOLTS AS NOTED ON DRAWINGS AND SHALL BE MADE "SNUG-TIGHT" ONLY AS DEFINED BY ANSI/AISC 360-05. SPECIAL INSPECTIONS ARE NOT REQUIRED FOR THESE CONDITIONS. WASHERS ARE NOT REQUIRED UNLESS HOLES ARE OVERSIZED OR SLOTTED.

FILE NAME: WGA09716-2 Permits.dwg

Thomas County Building Department
APPROVED FOR CONSTRUCTION
January 13, 2023

RACEWAY #1581

29'-0" X 70'-4"
(8) COLUMN EDO CANOPY

HWY 84 & STATE ROUTE #3
THOMASVILLE, GA 31792

MADISON SCOPE OF WORK

MADISON TO FURNISH, DELIVER, AND INSTALL ONE (1) 29'-0" X 70'-4" RACETRAC CANOPY, TO INCLUDE:

MATERIALS
1. MADISON TO FURNISH ANCHOR BOLTS AND ACM TEMPLATES FOR CONTRACTOR INSTALLATION.
2. ALL STRUCTURAL STEEL WILL BE FURNISHED WITH ONE (1) COAT OF SHOP APPLIED GREY PRIMER.
3. FOUR (4) 1 1/4" CONDUITS IN CUSTOMER DESIGNATED COLUMNS WITH SEAL OFFS AND ACCESS PLATES LOCATED 48" ABOVE FINISHED GRADE.
4. STEEL CEILING DECK WITH 3" RIBS AT 16" ON CENTER WITH EMBOSSED BRONZE FINISH.
5. 20 GA. PERIMETER SOFFIT/GUTTER SYSTEM W/EMBOSSED BRONZE FINISH.
6. SCUPPERS WITH OVERFLOWS FOR WATER DRAINAGE.
7. CANOPY TO HAVE 18'-0" MOUNTING HEIGHT.
8. FASCIA PANELS SHALL BE 4'-0" HIGH 4MM 'DURAGLOSS REGIONS GREEN' ACM WITH STRUCTURAL OUTRIGGER SYSTEM.
9. MADISON TO FURNISH ALL FASTENERS AND SEALANT ASSOCIATED WITH ITS SCOPE OF WORK.
10. ALL FIELD APPLIED FINISH COATINGS SHALL BE THE RESPONSIBILITY OF THE CONTRACTOR.

SITE READINESS
1. JOBSITE MUST BE CLEAR OF ANY CONSTRUCTION DEBRIS, TRENCHING, OR OTHER OBSTACLES PREVENTING ACCESS TO THE CANOPY AREA. IF CONDITIONS OR SCHEDULE REQUIRE SPECIALIZED EQUIPMENT OR ADDITIONAL LABOR HOURS TO WORK AROUND INADEQUATE CONDITIONS, COST INCURRED WILL BE BILLED TO THE CONTRACTOR AT COST +15%.
2. FOUNDATIONS AND ANCHOR BOLTS MUST BE SET IN ACCORDANCE W/MADISON PRODUCED APPROVED FOUNDATION PLAN THAT IS DELIVERED WITH THE ANCHOR BOLTS.
3. CONTRACTOR SHALL PROVIDE NECESSARY SPACE FOR UNLOADING OF MATERIALS, AND COMMUNICATE ANY SPACE LIMITATIONS PRIOR TO DELIVERY.
4. CONTRACTOR SHALL PROVIDE PROGRESS PHOTOS AS EVIDENCE OF SITE READINESS PRIOR TO EACH MADISON MOBILIZATION.

INSTALLATION
1. CONTRACTOR TO INSTALL MADISON FURNISHED ANCHOR BOLTS, UTILIZING TEMPLATES AND DRAWINGS PROVIDED. MADISON MUST BE NOTIFIED AT LEAST TWO (2) WEEKS IN ADVANCE PRIOR TO NEEDING THE ANCHOR BOLTS.
2. MADISON TO UNLOAD AND STAGE MATERIALS AS NEEDED.
3. MADISON TO SET AND ANCHOR STRUCTURAL STEEL COLUMNS AND ROOF FRAMING.
4. MADISON TO HANG ROOF DECK AND INSTALL GUTTER SYSTEM, FASCIA BRACKETS, AND FASCIA PANELS.
5. MADISON TO CUT HOLES AND MOUNT CUSTOMER FURNISHED LED LIGHT FIXTURES PER PLAN.
6. CONTRACTOR TO FURNISH REQUIRED LABOR AND MATERIALS TO WIRE LIGHT FIXTURES.
7. MADISON TO DISPOSE OF RELATED CONSTRUCTION DEBRIS IN CONTRACTOR FURNISHED DUMPSTER
8. CONTRACTOR TO MAKE FINAL DRAIN CONNECTION TO UNDERGROUND STORM SYSTEM.

EXCLUSIONS
1. PERMITS, PERMIT SUBMITTAL, LICENSE FEES.
2. SPECIAL INSPECTIONS
3. UNION / PREVAILING WAGE REQUIREMENTS
4. BUY AMERICAN ACT OR ANY OTHER RESTRICTIVE PURCHASING AGREEMENTS.
5. FINISH PAINT, FINISH COATINGS.
6. WIRING OF LIGHTS.
7. ELECTRICAL WORK / MATERIALS.
8. CONCRETE WORK / MATERIALS.
9. SIGNAGE PROCUREMENT, MOUNTING, AND WIRING (IF APPLICABLE).
10. PACKING GROUT BETWEEN BEARING SURFACES AND BASE PLATES.
11. ILLUMINATED SIGNAGE, NEON, AND LED
12. FASCIA DECALS OTHER THAN THOSE LISTED IN SCOPE OF WORK.
13. COLUMN SHROUDS (BRICK OR OTHER)
14. ANY ITEMS NOT SPECIFICALLY IDENTIFIED IN THIS EXHIBIT.
15. ANY ITEMS SPECIFIED AS BEING PERFORMED BY OTHERS OR BY CONTRACTOR IN THIS EXHIBIT.

SCHEDULE OF DRAWINGS

SHEET NUMBER	DRAWING TITLE	RELEASE DATE
CS-1	COVER SHEET	
F-1	FOUNDATION PLAN AND DETAILS	
A-1	FRAMING PLAN AND LIGHTING PLAN	
A-2	ELEVATIONS	
A-3	SECTIONS AND DETAILS	

SCHEDULE OF REVISIONS

REVISION NUMBER	DESCRIPTION	SHEETS

REV.	DATE	DESCRIPTION	BY

PROJECT: RACEWAY #1581 — 29'-0" X 70'-4" (8) COLUMN EDO CANOPY COVER PAGE

LOCATION: HWY 84 & STATE ROUTE #3 THOMASVILLE, GA 31792

MADISON INDUSTRIES
MADISONIND.COM
CORPORATE OFFICE
18800 Studebaker Road
Suite A9
Cerritos, CA 90703
562.484.5099
CALIFORNIA
6372 Holmes Avenue
Los Angeles, CA 90001
562.484.5099
GEORGIA
1035 Iris Drive
Conyers, GA 30094
770.483.4401

THESE DRAWINGS AND ALL INFORMATION HEREON ARE OF A CONFIDENTIAL NATURE AND REMAIN THE PROPERTY OF MADISON INDUSTRIES (MI). ANY USE OR REPRODUCTION OF THESE DRAWINGS FOR ANY PURPOSE, EXCEPT BY WRITTEN PERMISSION OF MADISON INDUSTRIES IS STRICTLY PROHIBITED.

GEORGIA REGISTERED PROFESSIONAL ENGINEER No. PE036825 JOHN F. BRADLEY
9/16/22

PROFESSIONAL ENGINEER

MODEL No.

SCALE

DRAWN BY	DATE
RS	9/14/22
CHECKED BY	DATE
DD	9/15/22
MI ENGINEER	DATE
JFB	9/13/22

DRWG. No. CS-1

SHEET 1 OF 5

JOB No. WGA09716-2

APPROVED FOR CONSTRUCTION

APPROVED FOR CONSTRUCTION

OLD ALBANY ROAD

BUILDING

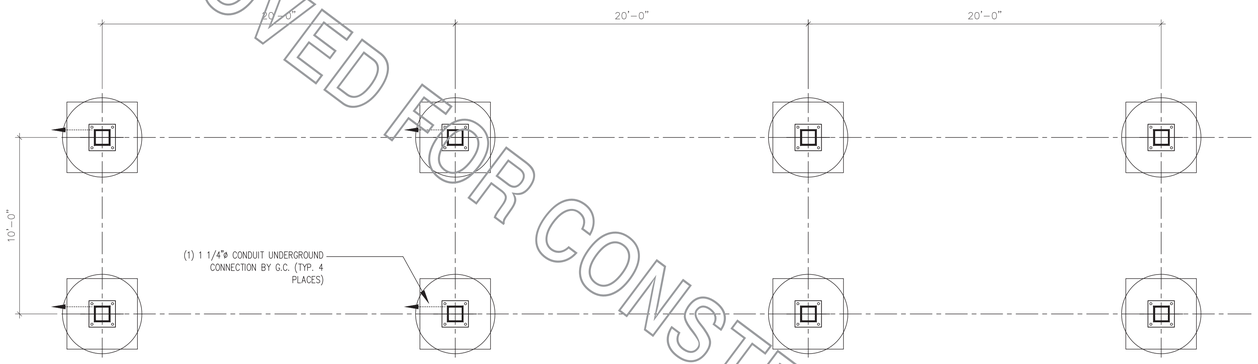

N. THOMASVILLE ROAD

FOUNDATION PLAN
SCALE: 1/4" = 1'-0"

NOTES:

1. ALLOWABLE SOIL BEARING CAPACITY = 2500 P.S.F.
LATERAL SOIL PRESSURE = 170 P.S.F. PER FOOT OF DEPTH
CONCRETE = 4000 P.S.I. AT 28 DAYS
REINFORCING = DEFORMED BILLET PER A.S.T.M. A706 GRADE 60

2. IT SHALL BE THE RESPONSIBILITY OF THE GENERAL CONTRACTOR TO PROVIDE REQUIRED LOAD TESTS OR OTHER ADEQUATE PROOF AS TO THE PERMISSIBLE SAFE BEARING CAPACITY OF THE SOIL.

3. IT SHALL BE THE RESPONSIBILITY OF THE GENERAL CONTRACTOR TO ACCURATELY POUR ALL FOUNDATION TO THE PROPER ELEVATIONS AS SHOWN ON THE APPROVED FOUNDATION PLAN AND SET ALL ANCHOR BOLTS AND/OR LEVELING PLATES TO PROPER DIMENSIONS AND ELEVATIONS.

GRADE INFO

HP SLAB = 245.15'

LP SLAB @ COL. = 244.28'

TOP FOOTING = 242.28'

THIS INFORMATION IS BASED ON CUSTOMER GRADING PLAN DRAWING C4 - DATED: 8/25/22

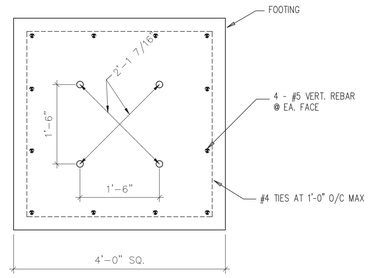

SECTION A-A
SCALE: 3/4" = 1'-0"

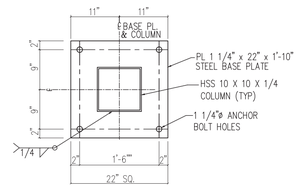

BASE PLATE DETAIL
SCALE: 3/4" = 1'-0"

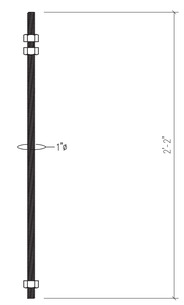

ASTM F1554 GR. 36 OR A36 (Fy = 36 ksi) ANCHOR BOLTS, WASHERS, & NUTS FURNISHED BY MADISON, INSTALLED BY G.C.

ANCHOR BOLT DETAIL #2
SCALE: 3/4" = 1'-0"

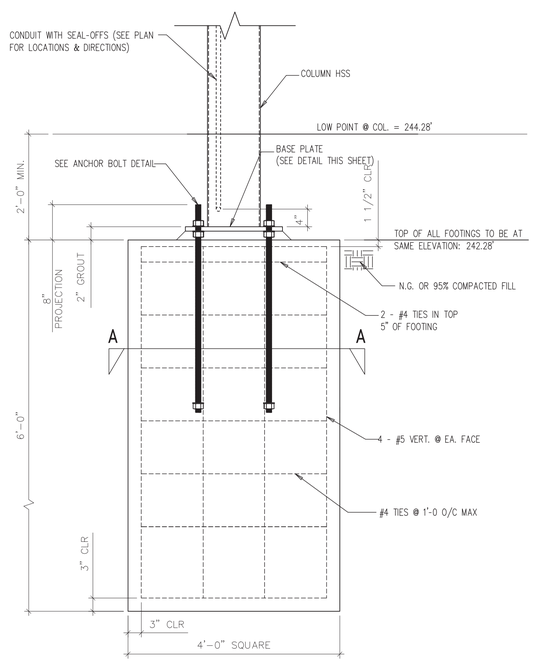

SQUARE FOOTING DETAIL
SCALE: 3/4" = 1'-0"

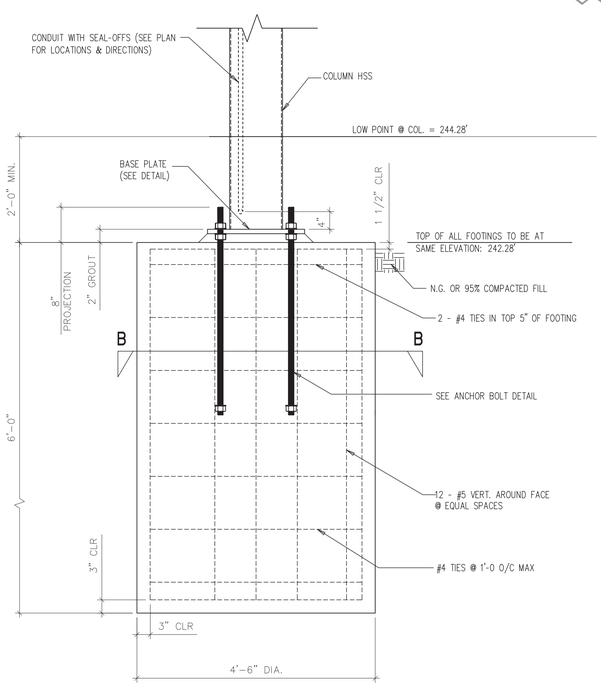

ROUND FOOTING DETAIL - OPTIONAL
SCALE: 3/4" = 1'-0"

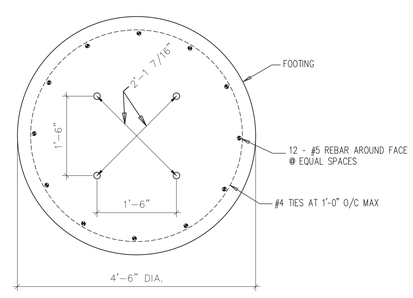

SECTION B-B
SCALE: 3/4" = 1'-0"

DO NOT USE FOR CONSTRUCTION OF FOUNDATION UNLESS APPROVED BY MADISON INDUSTRIES REPRESENTATIVE IN SPACE BELOW.

APPROVED FOR CONSTRUCTION

BY: Rashad Stillwell

DATE: 9/14/22

IT SHALL BE THE RESPONSIBILITY OF THE GENERAL CONTRACTOR TO ACCURATELY POUR AND SET ANCHOR BOLTS AT DIMENSIONS SHOWN ON FOUNDATION DRAWINGS.

REV.	DATE	DESCRIPTION	BY

PROJECT: **RACEWAY #1581**
29'-0" X 70'-4"
(8) COLUMN EDO CANOPY
FOUNDATION PLAN AND DETAILS

LOCATION: HWY 84 & STATE ROUTE #3
THOMASVILLE, GA 31792

MADISON INDUSTRIES
MADISONIND.COM

CORPORATE OFFICE
18000 Studebaker Road
Suite 300
Cerritos, CA 90703
562.484.5099

CALIFORNIA
6372 Holmes Avenue
Los Angeles, CA 90001
562.484.5099

GEORGIA
1035 Iris Drive
Conyers, GA 30094
770.483.8401

THESE DRAWINGS AND ALL INFORMATION HEREON ARE OF A CONFIDENTIAL NATURE AND REMAIN THE PROPERTY OF MADISON INDUSTRIES (MI). ANY USE OR REPRODUCTION OF THESE DRAWINGS FOR ANY PURPOSE, EXCEPT BY WRITTEN PERMISSION OF MADISON INDUSTRIES IS STRICTLY PROHIBITED.

GEORGIA REGISTERED No. PE036829 PROFESSIONAL ENGINEER JOHN F. BRADLEY
9/16/22

PROFESSIONAL ENGINEER

MODEL No.

SCALE

DRAWN BY	DATE
RS	9/14/22
CHECKED BY	DATE
DD	9/15/22
MI ENGINEER	DATE
JFB	9/13/22

DRWG. No. F-1

SHEET 2 OF 5

JOB No. WGA09716-2

FILE NAME: WGA09716-2 Permits.dwg

R3 JULY 2018

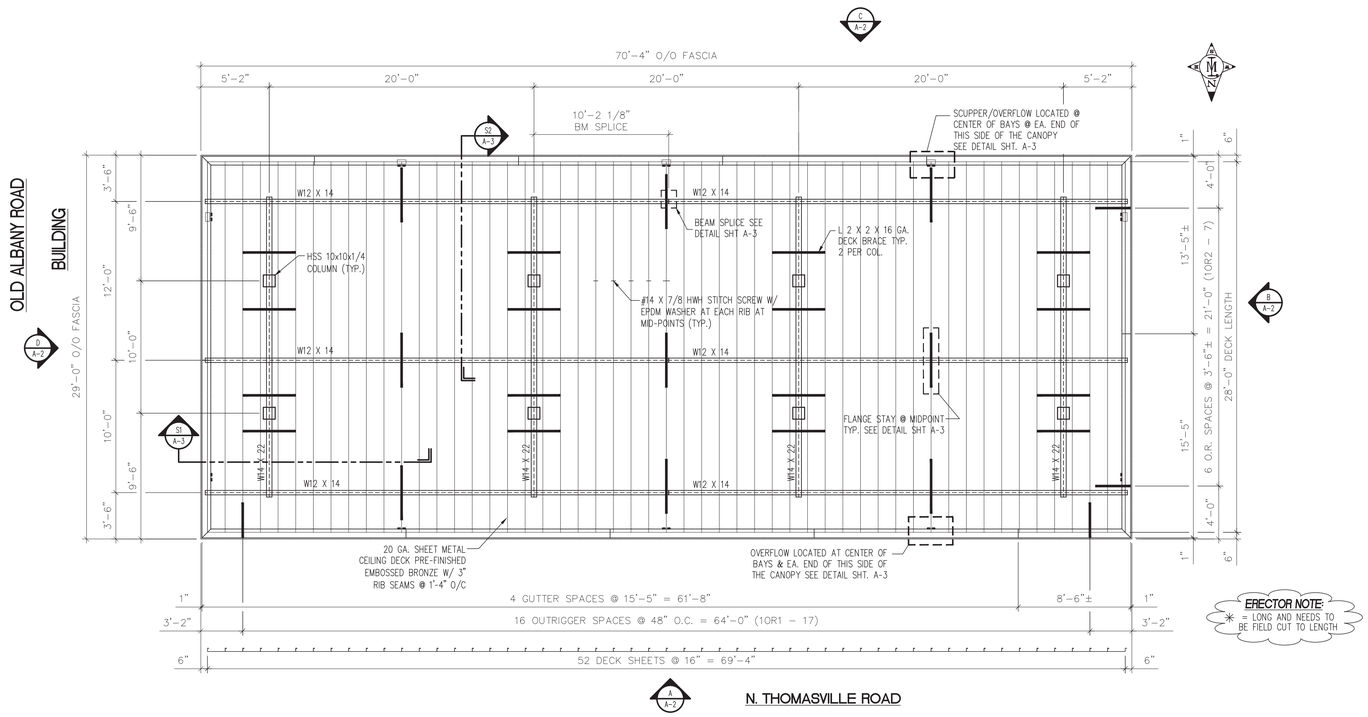

ROOF FRAMING PLAN
SCALE: 3/16" = 1'-0"

ERECTOR NOTE:
* = LONG AND NEEDS TO BE FIELD CUT TO LENGTH

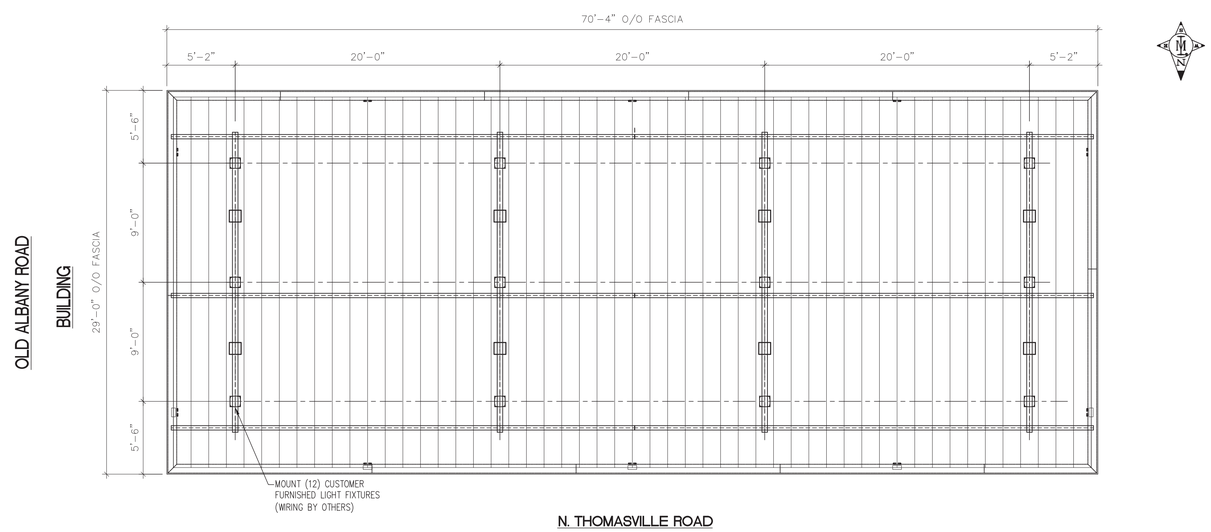

LIGHTING LAYOUT PLAN
SCALE: 3/16" = 1'-0"

REV.	DATE	DESCRIPTION	BY

PROJECT
RACEWAY #1581
29'-0" X 70'-4"
(8) COLUMN EDO CANOPY
FRAMING PLAN AND LIGHTING PLAN

LOCATION
HWY 84 & STATE ROUTE #3
THOMASVILLE, GA 31792

MADISON INDUSTRIES
MADISONIND.COM

CORPORATE OFFICE
18000 Studebaker Road
Suite 300
Cerritos, CA 90703
562.484.5999

CALIFORNIA
6172 Holmes Avenue
Los Angeles, CA 90001
562.484.5999

GEORGIA
1035 Iris Drive
Conyers, GA 30094
770.863.8401

THESE DRAWINGS AND ALL INFORMATION HEREON ARE OF A CONFIDENTIAL NATURE AND REMAIN THE PROPERTY OF MADISON INDUSTRIES (MI). ANY USE OR REPRODUCTION OF THESE DRAWINGS FOR ANY PURPOSE, EXCEPT BY WRITTEN PERMISSION OF MADISON INDUSTRIES IS STRICTLY PROHIBITED.

GEORGIA REGISTERED No. PE036825 PROFESSIONAL ENGINEER JOSHUA F. BRADLEY
9/16/22

PROFESSIONAL ENGINEER

MODEL No.

SCALE

DRAWN BY	DATE
RS	9/14/22
CHECKED BY	DATE
DD	9/15/22
MI ENGINEER	DATE
JFB	9/13/22

DRWG. No.
A-1

SHEET 3 OF 5

JOB No.
WGA09716-2

R3 JULY 2018

FILE NAME: WGA09716-2 Permits.dwg

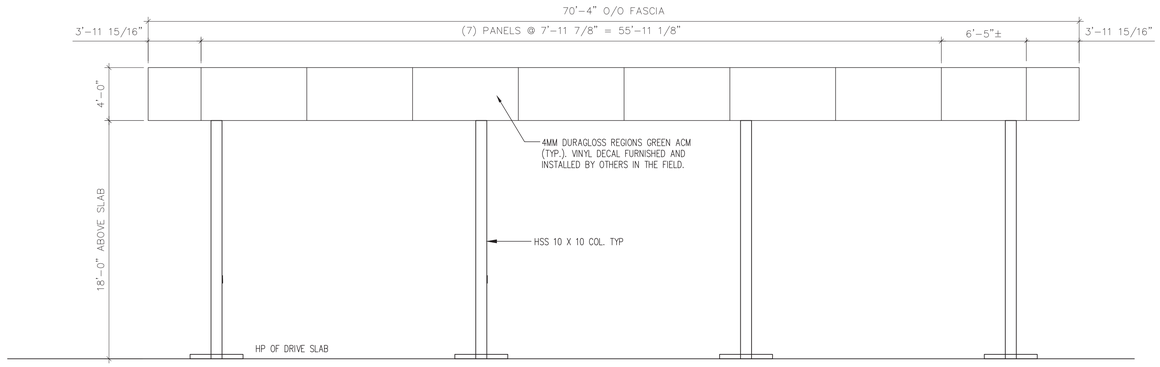

ELEVATION (A / A-1)
SCALE: 3/16" = 1'-0"

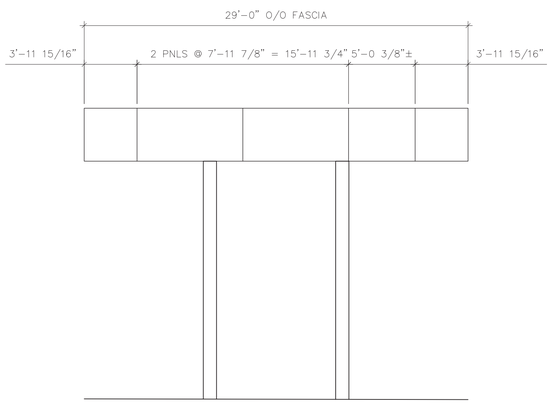

ELEVATION (B / A-1)
SCALE: 3/16" = 1'-0"

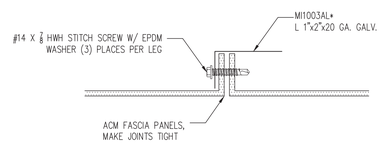

TYP. FASCIA JOINT DETAIL

ERECTOR NOTE:
* = LONG AND NEEDS TO BE FIELD CUT TO LENGTH

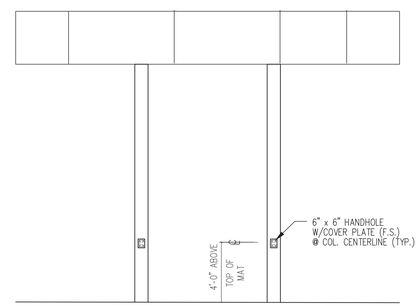

ELEVATION (D / A-1)
SCALE: 3/16" = 1'-0"

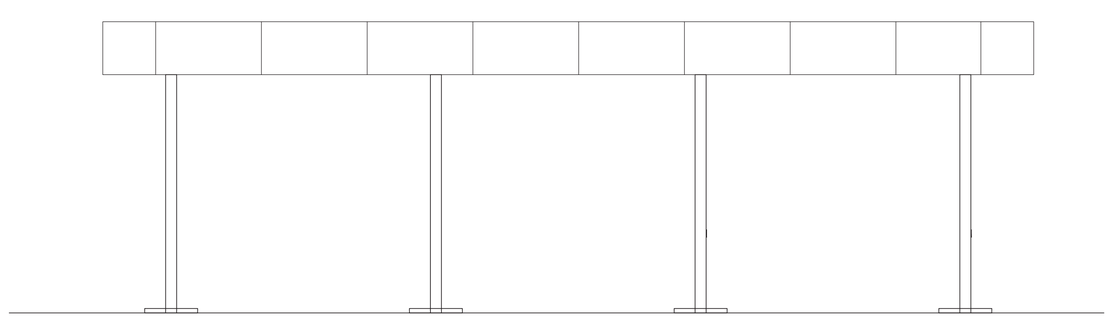

ELEVATION (C / A-1)
SCALE: 3/16" = 1'-0"

REV.	DATE	DESCRIPTION	BY

PROJECT
RACEWAY #1581
29'-0" X 70'-4"
(8) COLUMN EDO CANOPY
ELEVATIONS

LOCATION
HWY 84 & STATE ROUTE #3
THOMASVILLE, GA 31792

MADISON INDUSTRIES
MADISONIND.COM
CORPORATE OFFICE
18000 Studebaker Road
Suite A-9
Cerritos, CA 90703
562.484.5099
CALIFORNIA
6372 Holmes Avenue
Los Angeles, CA 90001
562.484.5099
GEORGIA
1035 Iris Drive
Conyers, GA 30094
770.483.4801

THESE DRAWINGS AND ALL INFORMATION HEREON ARE OF A CONFIDENTIAL NATURE AND REMAIN THE PROPERTY OF MADISON INDUSTRIES (MI). ANY USE OR REPRODUCTION OF THESE DRAWINGS FOR ANY PURPOSE, EXCEPT BY WRITTEN PERMISSION OF MADISON INDUSTRIES IS STRICTLY PROHIBITED.

GEORGIA REGISTERED No. PE036822 PROFESSIONAL ENGINEER JOHN F. BRADLEY
9/16/22

PROFESSIONAL ENGINEER

MODEL No.

SCALE

DRAWN BY	DATE
RS	9/14/22
CHECKED BY	DATE
DD	9/15/22
MI ENGINEER	DATE
JFB	9/13/22

DRWG. No.
A-2

SHEET 4 OF 5

JOB No.
WGA09716-2

R3 JULY 2018
FILE NAME: WGA09716-2 Permits.dwg

R3 JULY 2018

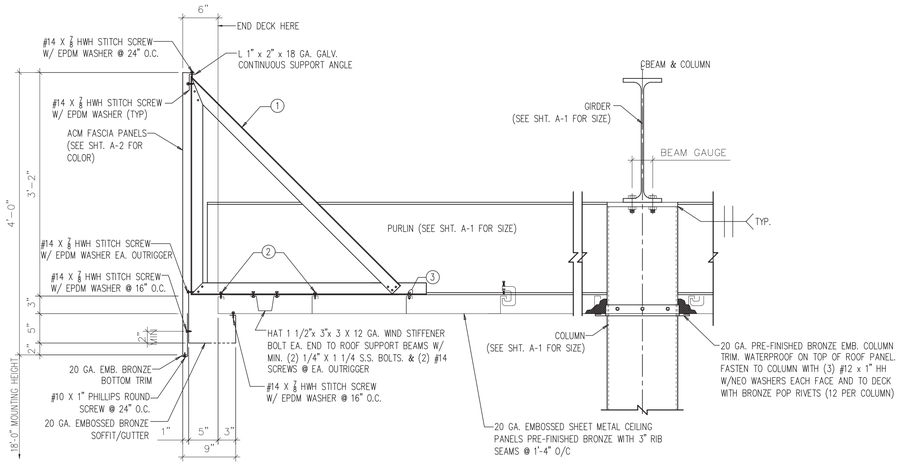

SECTION

(FROM SHEET A-1)
SCALE: 1" = 1'-0"

S1

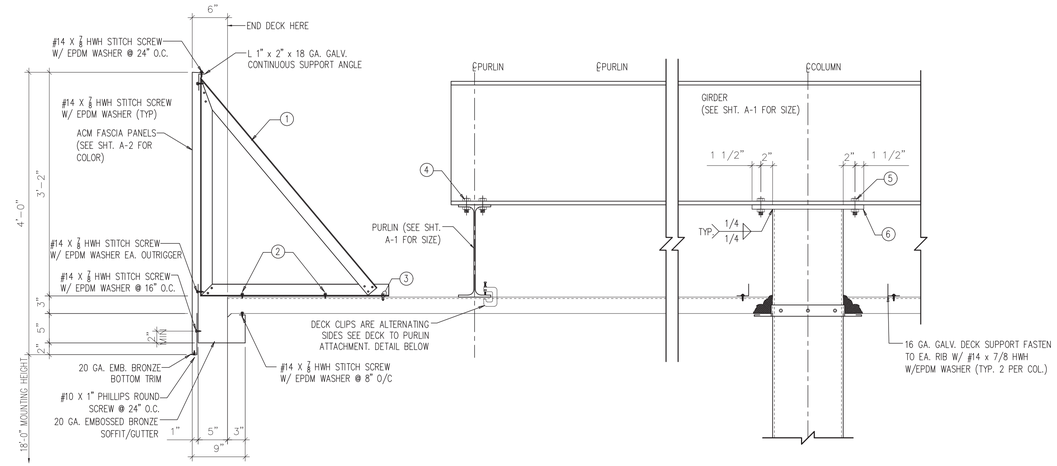

SECTION

(FROM SHEET A-1)
SCALE: 1" = 1'-0"

S2

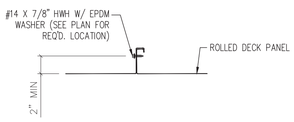

TYP. STITCH SCREW DETAIL

SCALE: NTS

DETAIL

(FROM SHEET A-1)

D1

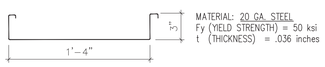

3' DECK PROFILE

SCALE: 1 1/2" = 1'-0"

DETAIL

(FROM SHEET A-1)

D2

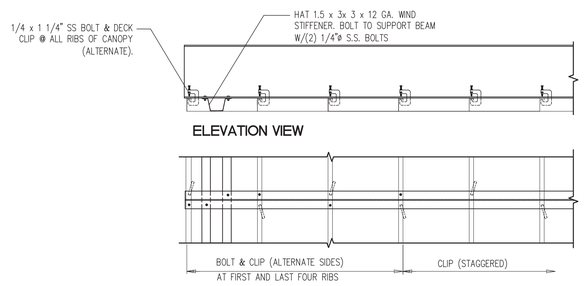

DEck FASTENING DETAIL

SCALE: N.T.S.

DETAIL

(FROM SHEET A-1)

D3

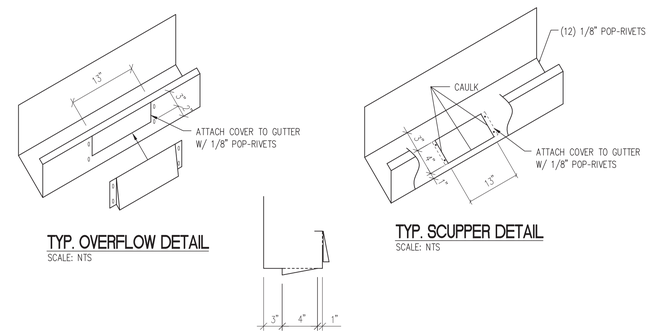

TYP. OVERFLOW DETAIL

SCALE: NTS

TYP. SCUPPER DETAIL

SCALE: NTS

DETAIL

(FROM SHEET A-1)

D4

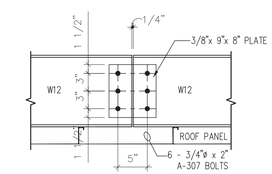

BEAM SPLICE DETAIL

SCALE: 1" = 1'-0"

DETAIL

(FROM SHEET A-1)

D5

SCHEDULE

MARK	ITEM	DESCRIPTION
1	OUTRIGGER	L 2"x2"x16 GA. GALVANIZED SHEET METAL @ 4'-0" O.C.
2	OUTRIGGER FASTENER	(2) #14 X 7/8 HWH W/ EPDM WASHER PER OUTRIGGER
3	OUTRIGGER FASTENER	(1) 1/4"ø X 1 1/4" S.S. BOLT W/NUT PER OUTRIGGER
4	GIRDER TO PURLIN CONNECTION	(4) 5/8"ø x 2" A307 M. BOLTS
5	GIRDER TO COLUMN CONNECTION	(4) 3/4"ø x 2 1/2" A307 M. BOLTS
6	COLUMN CAP PLATE	PLATE 3/4" x 10" x 1'-5"

RCV.	DATE	DESCRIPTION	BY

PROJECT

RACEWAY #1581
29'-0" X 70'-4"
(8) COLUMN EDO CANOPY
SECTIONS

LOCATION

HWY 84 & STATE ROUTE #3
THOMASVILLE, GA 31792

MADISON INDUSTRIES
MADISONIND.COM

CORPORATE OFFICE
18000 Studebaker Road
Suite 300
Cerritos, CA 90703
562.484.5099

CALIFORNIA
6372 Holmes Avenue
Los Angeles, CA 90001
323.584.5099

GEORGIA
1035 Iris Drive
Conyers, GA 30094
770.483.9441

THESE DRAWINGS AND ALL INFORMATION HEREON ARE OF A CONFIDENTIAL NATURE AND REMAIN THE PROPERTY OF MADISON INDUSTRIES (MI). ANY USE OR REPRODUCTION OF THESE DRAWINGS FOR ANY PURPOSE, EXCEPT BY WRITTEN PERMISSION OF MADISON INDUSTRIES IS STRICTLY PROHIBITED.

GEORGIA REGISTERED No. PE036829 PROFESSIONAL ENGINEER JOHN F. BRADLEY
9/16/22

PROFESSIONAL ENGINEER

MODEL No.

SCALE

DRAWN BY	DATE
RS	9/14/22
CHECKED BY	DATE
DD	9/15/22
MI ENGINEER	DATE
JFB	9/13/22

DRWG. No.
A-3

SHEET 5 OF 5

JOB No.
WGA09716-2

FILE NAME: WGA09716-2 Permits.dwg